GALİPOĞLU HİDROMAS®
HİDROLİK OTOMOTİV SAN.ve TİC. A.Ş

Phone : 90.332 • 239 0852 (pbx)
Fax : 90.332 • 239 0851
Addres : 2. Organize Sanayi Bölgesi
Evrenköy Caddesi No: 14 KONYA/TURKIYE
Selçuklu Vergi Dairesi : 388 008 09 71 • Ticaret Sicil No : 16745
Oda Sicil No : 23761 • Sanayi Sicil No : 10 / 1026
hidromas@hidromas.com

GHS 135 x 3 x 3450 H

Drawing No :43135334506
Referance No :04-001

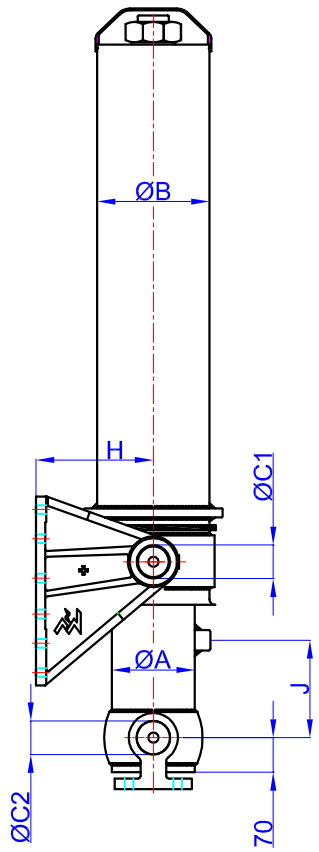

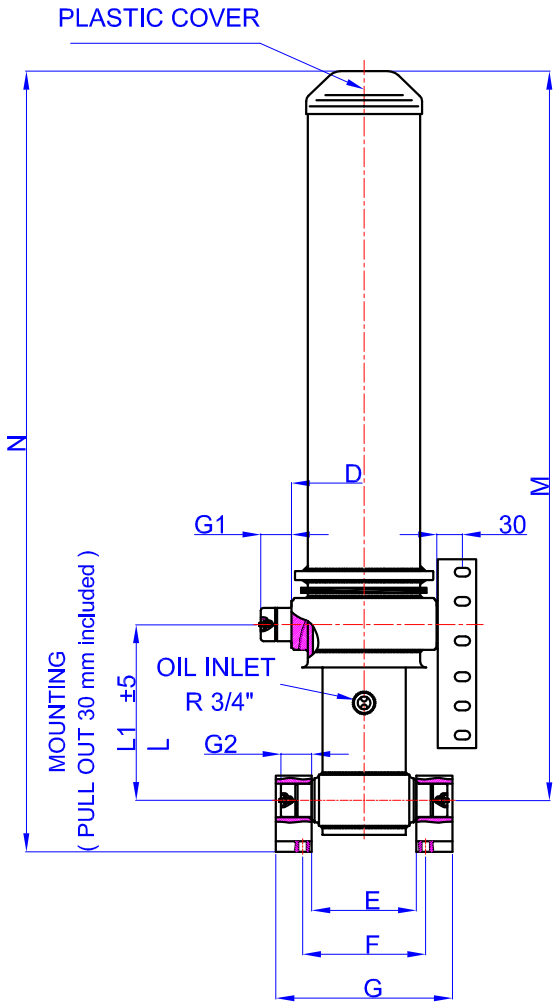

GHLB 65-229
47000121-0001

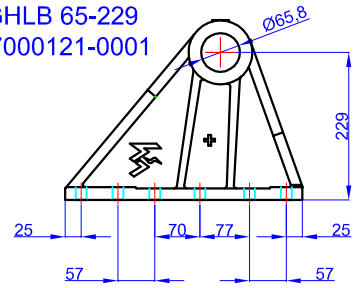

B	:	219	mm
C1	:	65	mm
C2	:	60	mm
D	:	283	mm
E	:	193	mm
F	:	240	mm
G	:	333	mm
G1	:	60	mm
G2	:	60	mm
H	:	229	mm
J	:	190	mm
M	:	1470	mm
N	:	1570	mm
L	:	343	mm
*L1	:	373	mm

* Inc 30 mm pull out : tolerance +20 -0

47000057-0001
(Bracket Kits T
60-100-150-22)

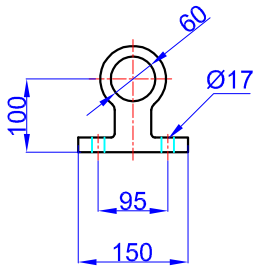

* Brackets are Optional
Hard Chromed all stages
Working Pressure : 135 Bar 135MPa
Max. Working Pressure : 180 Bar 180 MPa
All Cylinder Materials are St 52 Cold Drawn Tubes
Tipping Weight = Weight Body + Payload

STAGE	1	2	3	4	5	6	7	8	TOTAL
EFFECTIVE DIAMETER (mm)	Ø135	Ø116	Ø98						
STROKE	1150	1150	1150						3450
OIL DISPLACEMENT (L)	17,5	13	9,5						47,5
135 BAR (TONS)									24

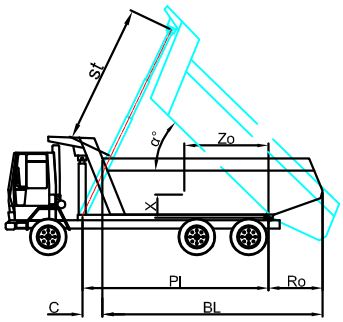

BL (body length)
Ro (rear overhang)
Ycog (vert. pos. centre of gravity)
Pl(Pivot lengt)

$$\alpha° = \frac{st \times 60}{Pl}$$

BL	4400			4300			4200		
Ro	200	400	600	200	400	600	200	400	600
α°	45	47	49	46	48	51	47	50	52
Ycog									
400	33	36	40	33	37	41	34	38	43
700	37	41	48	37	42	50	37	42	50
1000	41	48	56	43	50	58	44	52	59
st	3300	3290	3266	3296	3280	3315	3290	3333	3293