GALİPOĞLU HİDROMAS®
HİDROLİK OTOMOTİV SAN.ve TİC. A.Ş

Phone : 90.332 • 239 0852 (pbx)
Fax : 90.332 • 239 0851
Addres : 2. Organize Sanayi Bölgesi
Evrenköy Caddesi No: 14 KONYA/TURKIYE
Selçuklu Vergi Dairesi : 388 008 09 71 • Ticaret Sicil No : 16745
Oda Sicil No : 23761 • Sanayi Sicil No : 10 / 1026
hidromas@hidromas.com

GHS 135 x 4 x 3680 C

Drawing No :43135436803
Referance No :04-001

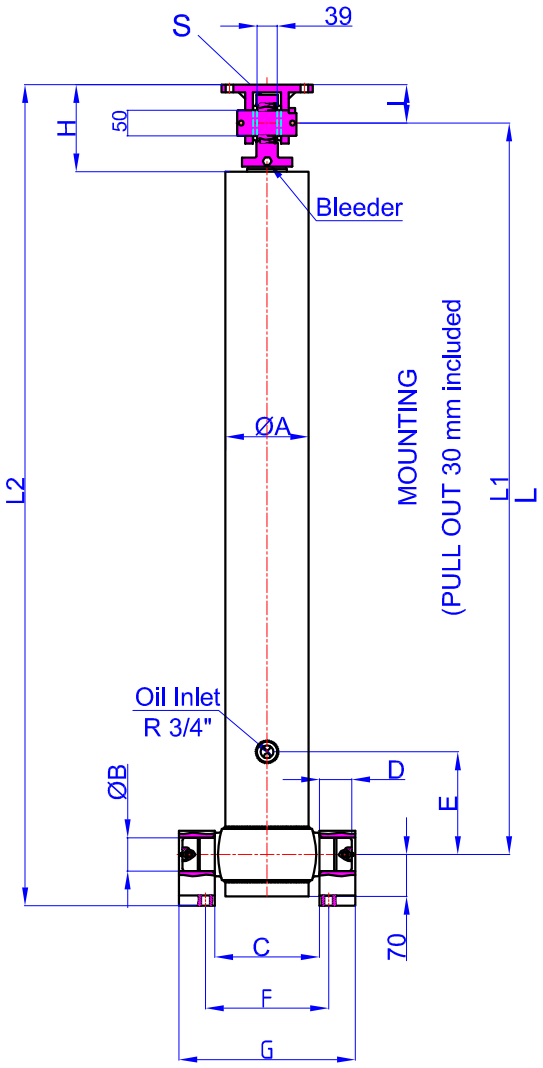

GHTC 50-75
47000020-02-001

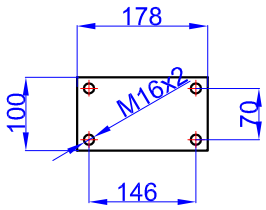

BRACKET KIDS
60-100-150-22
47000057-0001

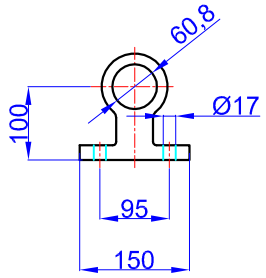

A	:	156	mm
B	:	60	mm
C	:	193	mm
D	:	60	mm
E	:	200	mm
F	:	240	mm
G	:	333	mm
H	:	170	mm
I	:	75	mm
L	:	1168	mm
*L1	:	1198	mm
L2	:	1343	mm
S	:	42	mm

* Inc 30 mm pull out : tolerance +20 -0

Hard Chromed all stages
Working Pressure : 135 Bar
Max. Working Pressure : 150- Bar
All Cylinder Materials are St 52 Cold Drawn Tubes
Tipping Weight = Weight Body + Payload

STAGE	1	2	3	4	5	6	7	8	TOTAL
EFFECTIVE DIAMETER (mm)	Ø135	Ø116	Ø98	Ø80					
STROKE	920	920	920	920					3680
OIL DISPLACEMENT (L)	14	10,5	7,5	5					41
THRUST AT 135 BAR (TONS)									24 T

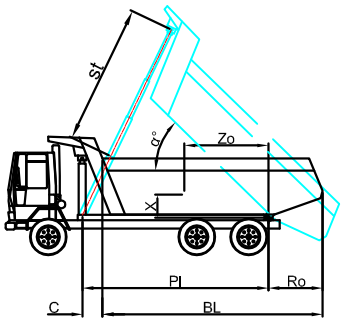

BL (body length)
Ro (rear overhang)
Ycog (vert. pos. centre of gravity)
Pl(Pivot lengt)

$$\alpha° = \frac{st \times 60}{Pl}$$

BL	4600			4500			4400		
Ro	200	400	600	200	400	600	200	400	600
α°	46	48	50	47	49	52	48	50	53
Ycog									
400	21	24	27	22	24	28	22	25	29
700	25	28	32	25	29	34	26	30	36
1000	31	33	41	29	35	45	30	37	48
st	3526	3520	3500	3525	3511	3553	3520	3500	3533