GALİPOĞLU HİDROMAS ®

Phone : 90.332 • 239 0852 (pbx)
Fax : 90.332 • 239 0851
Addres : 2. Organize Sanayi Bölgesi
Evrenköy Caddesi No: 14 KONYA/TURKIYE
Selçuklu Vergi Dairesi : 388 008 09 71 • Ticaret Sicil No : 16745
Oda Sicil No : 23761 • Sanayi Sicil No : 10 / 1026
hidromas@hidromas.com

GHS 154,5 x 4 x 4600 C

Product Code :43154446003
Referance No :07-001

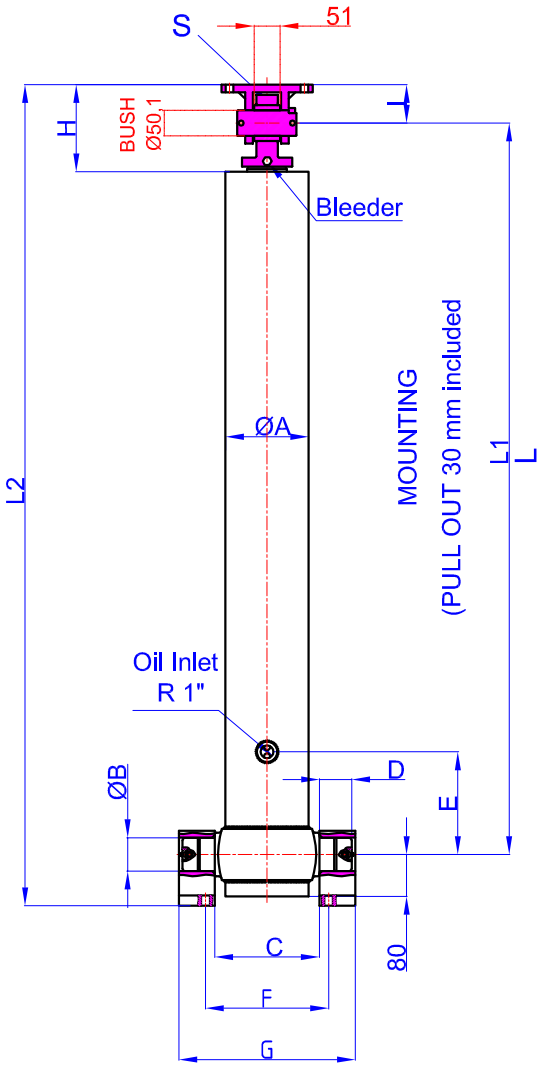

GHTC 50-85
47000026-02-003

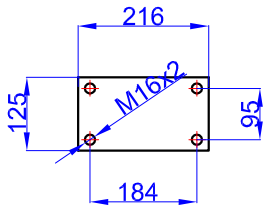

BRACKET KIDS
GHCB 60-125-220-44
47000058-0001

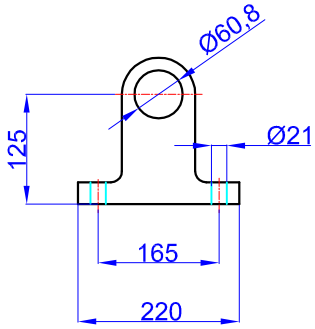

A	:	175	mm
B	:	60	mm
C	:	215	mm
D	:	60	mm
E	:	200	mm
F	:	305	mm
G	:	375	mm
H	:	180	mm
I	:	85	mm
L	:	1427	mm
*L1	:	1457	mm
L2	:	1637	mm
S	:	42	mm

* Inc 30 mm pull out : tolerance +20 -0

Hard Chromed all stages
Working Pressure : 135 Bar
Max. Working Pressure : 150 Bar
All Cylinder Materials are St 52 Cold Drawn Tubes
Tipping Weight = Weight Body + Payload

STAGE	1	2	3	4	5	6	7	8	TOTAL
EFFECTIVE DIAMETER (mm)	Ø154,5	Ø135	Ø116	Ø98					
STROKE	1150	1150	1150	1150					4600
OIL DISPLACEMENT (L)	23	17,5	13	9,5					71
135 BAR (TONS)									31

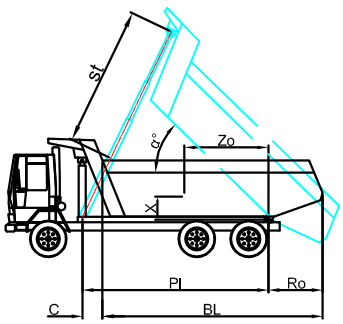

BL (body length)
Ro (rear overhang)
Ycog (vert. pos. centre of gravity)
Pl(Pivot lengt)

$$\alpha° = \frac{st \times 60}{Pl}$$

BL	5800			5600			5400		
Ro	200	500	800	200	500	800	200	500	800
α°	46	48	51	47	50	54	49	53	56
Ycog									
600	35	39	46	36	41	49	37	43	53
900	38	45	54	40	48	60	42	51	65
1200	43	51	65	45	56	69	48	60	73
st	4446	4400	4420	4386	4416	4500	4410	4505	4480