GALİPOĞLU ®
HİDROMAS

Phone : 90.332 • 239 0852 (pbx)
Fax : 90.332 • 239 0851
Addres : 2. Organize Sanayi Bölgesi
Evrenköy Caddesi No: 14 KONYA/TURKIYE
Selçuklu Vergi Dairesi : 388 008 09 71 • Ticaret Sicil No : 16745
Oda Sicil No : 23761 • Sanayi Sicil No : 10 / 1026
hidromas@hidromas.com

GHS 197 x 5 x 6650 C

Product Code :43197566503
Referance No :06-001

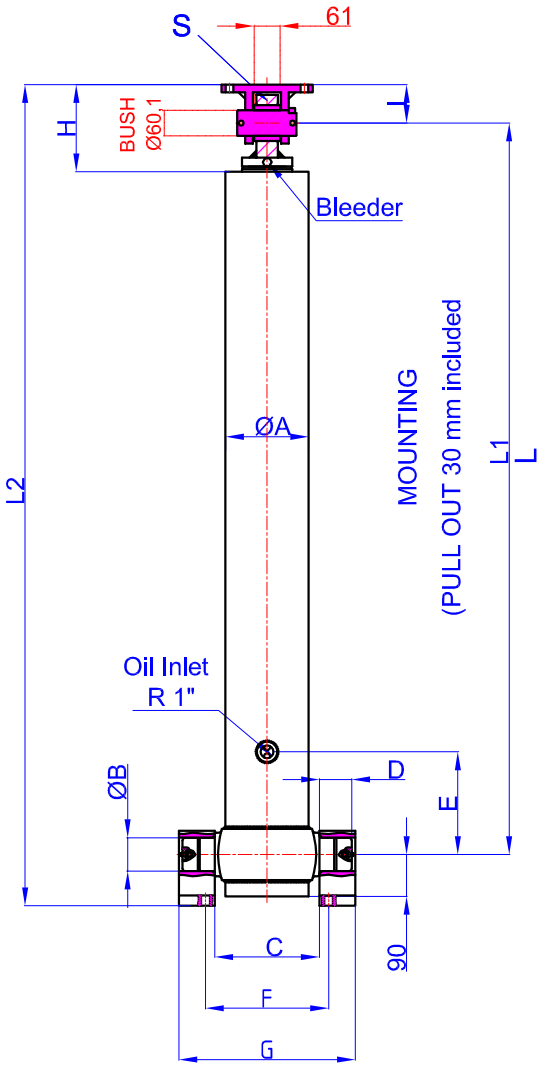

GHTC 60-90
47000035-02-002

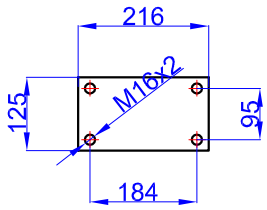

BRACKET KIDS
65-150-220-38
47000055-0001

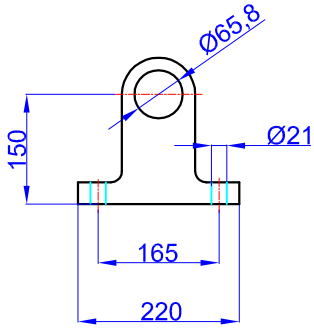

A	:	220	mm
B	:	65	mm
C	:	265	mm
D	:	60	mm
E	:	200	mm
F	:	343	mm
G	:	425	mm
H	:	185	mm
I	:	90	mm
L	:	1620	mm
*L1	:	1650	mm
L2	:	1860	mm
S	:	52	mm

* Inc 30 mm pull out : tolerance +20 -0

Hard Chromed all stages
Working Pressure : 135 Bar
Max. Working Pressure : 150 Bar
All Cylinder Materials are St 52 Cold Drawn Tubes
Tipping Weight = Weight Body + Payload

STAGE	1	2	3	4	5	6	7	8	TOTAL
EFFECTIVE DIAMETER (mm)	Ø197	Ø175	Ø154,5	Ø135	Ø116				
STROKE	1330	1330	1330	1330	1330				6650
OIL DISPLACEMENT (L)	42	34	27	20,5	15				152
135 BAR (TONS)									60 T

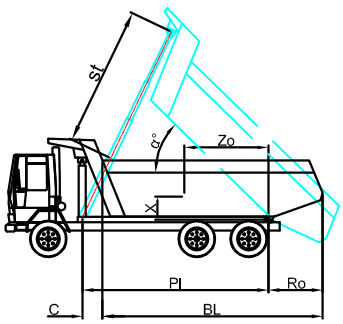

BL (body length)
Ro (rear overhang)
Ycog (vert. pos. centre of gravity)
Pl(Pivot lengt)

$$\alpha° = \frac{st \times 60}{Pl}$$

BL	8500			8300			8100		
Ro	200	500	800	200	500	800	200	500	800
α°	45	47	48	46	48	50	47	49	51
Ycog									
600	49	53	58	50	54	59	51	56	61
900	53	57	63	54	59	64	55	61	68
1200	57	62	70	58	64	73	60	67	76
st	6375	6423	6320	6363	6400	6416	6345	6370	6375