GALİPOĞLU HİDROMAS®
HİDROLİK OTOMOTİV SAN.ve TİC. A.Ş

Phone : 90.332 • 239 0852 (pbx)
Fax : 90.332 • 239 0851
Addres : 2. Organize Sanayi Bölgesi
Evrenköy Caddesi No: 14 KONYA/TURKIYE
Selçuklu Vergi Dairesi : 388 008 09 71 • Ticaret Sicil No : 16745
Oda Sicil No : 23761 • Sanayi Sicil No : 10 / 1026
hidromas@hidromas.com

GHS 135 x 3 x 3075 C

Stock Code : 43135330753
Referance No : 06-001

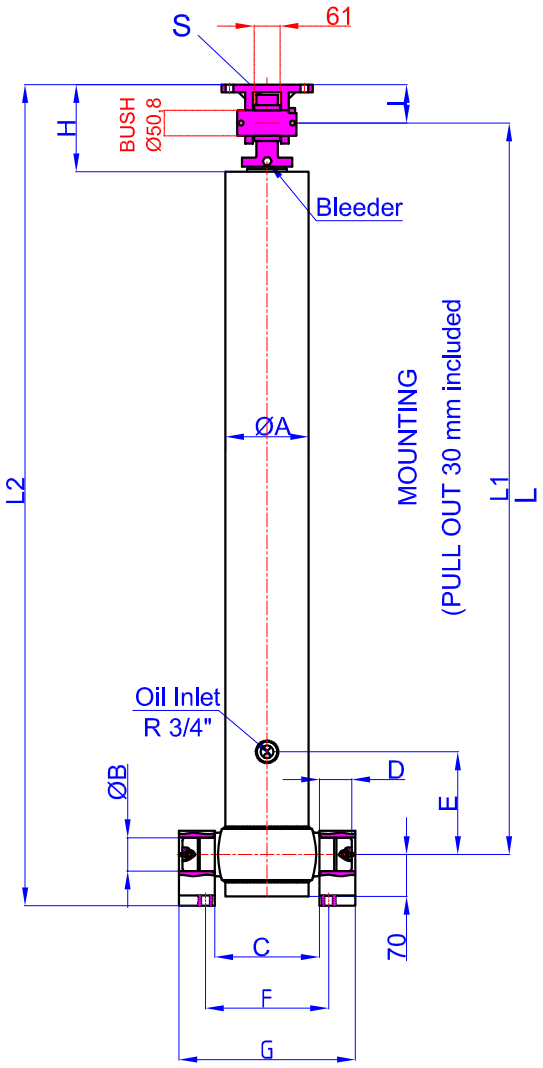

47000028-02-002
(Bracket Kits Top Clevis
GHTC BUSH 50,8x80)

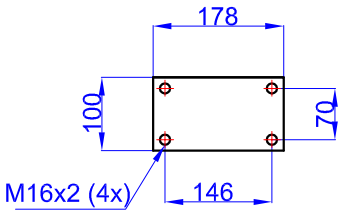

47000057-0001
(Bracket Kits T
60-100-150-22)

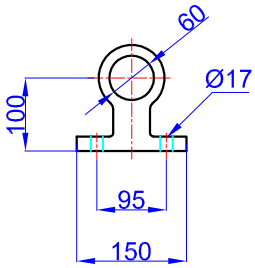

A	:	156	mm
B	:	60	mm
C	:	193	mm
D	:	60	mm
E	:	200	mm
F	:	240	mm
G	:	333	mm
H	:	170	mm
I	:	75	mm
L	:	1298	mm
*L1	:	1318	mm
L2	:	1473	mm
S	:	52	mm

* Inc 30 mm pull out : tolerance +20 -0

Hard Chromed all stages
Working Pressure : 135 Bar
Max. Working Pressure : 150- Bar
All Cylinder Materials are St 52 Cold Drawn Tubes
Tipping Weight = Weight Body + Payload

STAGE	1	2	3	4	5	6	7	8	TOTAL
EFFECTIVE DIAMETER (mm)	Ø135	Ø116	Ø98						
STROKE	1025	1025	1025						3075
OIL DISPLACEMENT (L)	15,5	11,5	8,5						42,5
135 BAR (TONS)									24

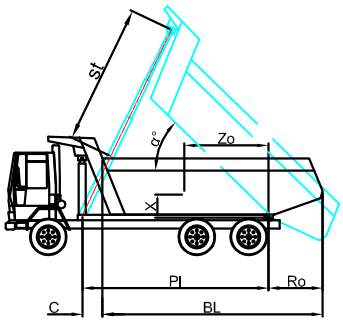

BL (body length)
Ro (rear overhang)
Ycog (vert. pos. centre of gravity)
Pl(Pivot lengt)

$$\alpha° = \frac{st \times 60}{Pl}$$

BL	3800			3700			3600		
Ro	200	400	600	200	400	600	200	400	600
α°	46	49	52	47	50	54	49	52	56
Ycog									
400	20	24	28	22	25	29	22	26	31
700	25	29	36	26	30	39	26	33	41
1000	28	36	43	30	38	45	32	39	46
st	2913	2940	2946	2898	2916	2970	2940	2946	2986