GALİPOĞLU ®
HİDROMAS

Phone : 90.332 • 239 0852 (pbx)
Fax : 90.332 • 239 0851
Addres : 2. Organize Sanayi Bölgesi
Evrenköy Caddesi No: 14 KONYA/TURKIYE
Selçuklu Vergi Dairesi : 388 008 09 71 • Ticaret Sicil No : 16745
Oda Sicil No : 23761 • Sanayi Sicil No : 10 / 1026
hidromas@hidromas.com

GHS 175 x 4 x 5680 C

Product Code :43175456803
Referance No : 04-001

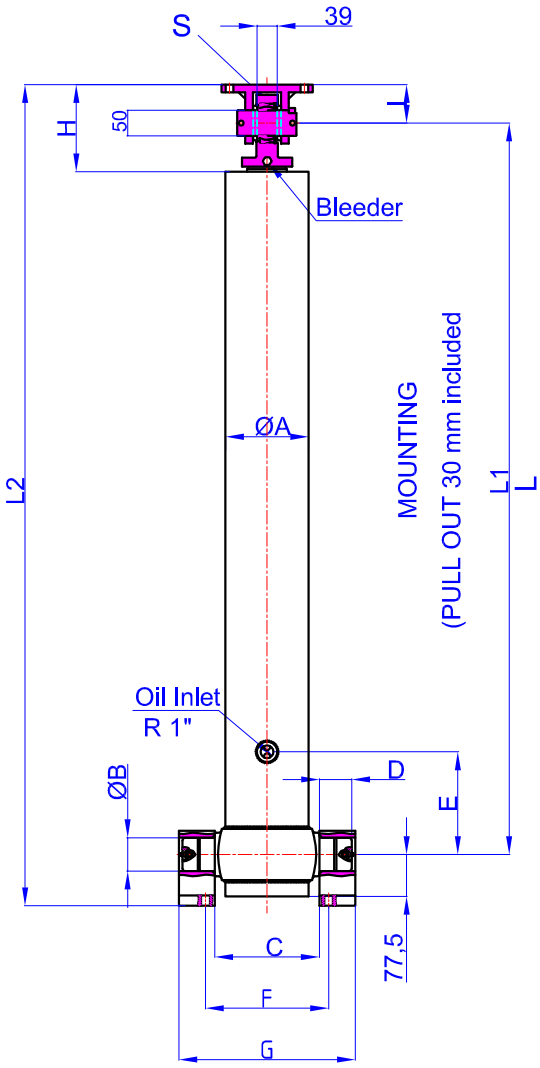

GHTC 50-85
47000026

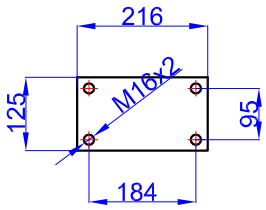

BRAKET KIDS 60-125-220-50
47000059

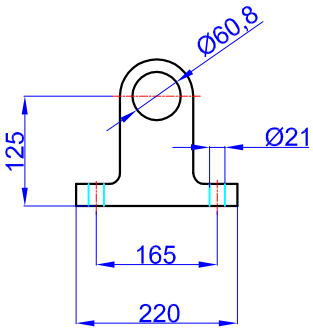

A	:	197	mm
B	:	60	mm
C	:	240	mm
D	:	60	mm
E	:	200	mm
F	:	343	mm
G	:	380	mm
H	:	180	mm
I	:	85	mm
L	:	1730	mm
*L1	:	1760	mm
L2	:	1940	mm
S	:	42	mm

* Inc 30 mm pull out : tolerance +20 -0

Hard Chromed all stages
Working Pressure : 170 Bar
Max. Working Pressure : 190- Bar
All Cylinder Materials are St 52 Cold Drawn Tubes
Tipping Weight = Weight Body + Payload

STAGE	1	2	3	4	5	6	7	8	TOTAL
EFFECTIVE DIAMETER (mm)	Ø175	Ø154,5	Ø135	Ø116					
STROKE	1420	1420	1420	1420					5680
OIL DISPLACEMENT (L)	36	28	21,5	16					115,5
135 BAR (TONS)									45

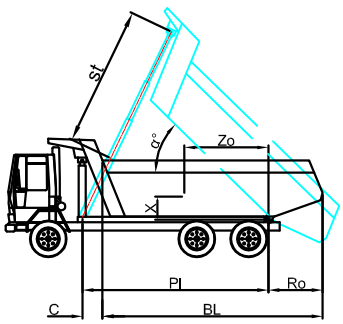

BL (body length)
Ro (rear overhang)
Ycog (vert. pos. centre of gravity)
Pl(Pivot lengt)

$$\alpha° = \frac{st \times 60}{Pl}$$

BL	7200			7000			6800		
Ro	200	500	800	200	500	800	200	500	800
α°	45	47	49	46	49	51	48	50	53
Ycog									
600	49	54	60	50	56	62	51	57	65
900	53	59	67	55	61	70	56	63	74
1200	58	65	75	59	68	80	62	71	83
st	5400	5405	5390	5366	5471	5440	5440	5416	5476