GALİPOĞLU HİDROMAS ®

Phone : 90.332 • 239 0852 (pbx)
Fax : 90.332 • 239 0851
Addres : 2. Organize Sanayi Bölgesi
Evrenköy Caddesi No: 14 KONYA/TURKIYE
Selçuklu Vergi Dairesi : 388 008 09 71 • Ticaret Sicil No : 16745
Oda Sicil No : 23761 • Sanayi Sicil No : 10 / 1026
hidromas@hidromas.com

GHS 175 x 5 x 6425 C

Drawing No :43175564253
Referance No :08-001

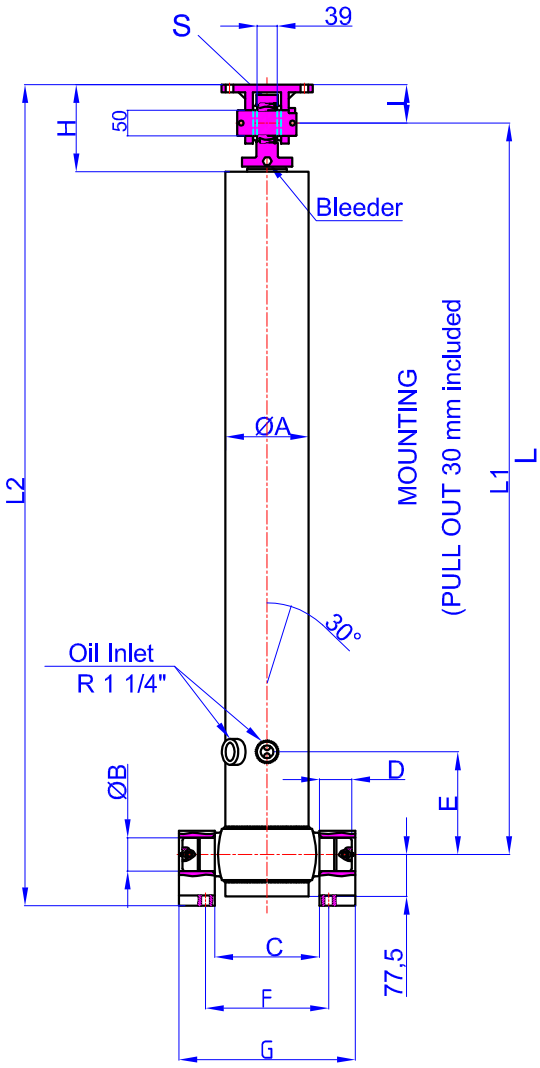

GHTC 50-85
47000026-02-002

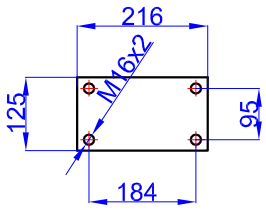

GHCB 60-125-220-50
47000059-0001

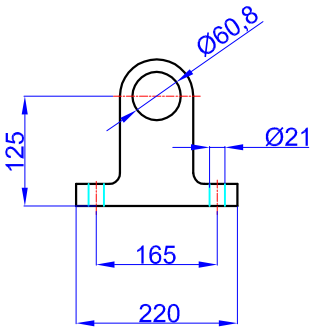

A	:	197	mm
B	:	60	mm
C	:	240	mm
D	:	60	mm
E	:	200	mm
F	:	343	mm
G	:	400	mm
H	:	180	mm
I	:	85	mm
L	:	1580	mm
*L1	:	1610	mm
L2	:	1790	mm
S	:	42	mm

* Inc 30 mm pull out : tolerance +20 -0

Hard Chromed all stages
Working Pressure : 170 Bar
Max. Working Pressure : 190- Bar
All Cylinder Materials are St 52 Cold Drawn Tubes
Tipping Weight = Weight Body + Payload

STAGE	1	2	3	4	5	6	7	8	TOTAL
EFFECTIVE DIAMETER (mm)	Ø175	Ø154,5	Ø135	Ø116	Ø98				
STROKE	1285	1285	1285	1285	1285				6425
OIL DISPLACEMENT (L)	32,5	26	19,5	14,5	10,5				110
135 BAR (TONS)									45

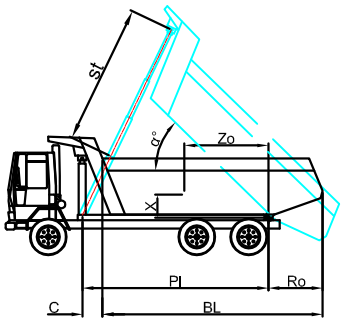

BL (body length)
Ro (rear overhang)
Ycog (vert. pos. centre of gravity)
Pl(Pivot lengt)

$$\alpha° = \frac{st \times 60}{Pl}$$

BL	8200			8000			7800		
Ro	200	500	800	200	500	800	200	500	800
α°	45	47	49	46	48	50	47	49	52
Ycog									
600	34	37	40	35	37	41	35	38	42
900	36	39	44	37	40	46	38	42	48
1200	39	43	49	40	45	51	41	47	54
st	6150	6188	6206	6133	6160	6166	6110	6125	6240