GALİPOĞLU HİDROMAS ®

Phone : 90.332 • 239 0852 (pbx)
Fax : 90.332 • 239 0851
Addres : 2. Organize Sanayi Bölgesi
Evrenköy Caddesi No: 14 KONYA/TURKIYE
Selçuklu Vergi Dairesi : 388 008 09 71 • Ticaret Sicil No : 16745
Oda Sicil No : 23761 • Sanayi Sicil No : 10 / 1026
hidromas@hidromas.com

GHS 197 x 5 x 6200 C

Drawing No :43197562003
Referance No :06-001

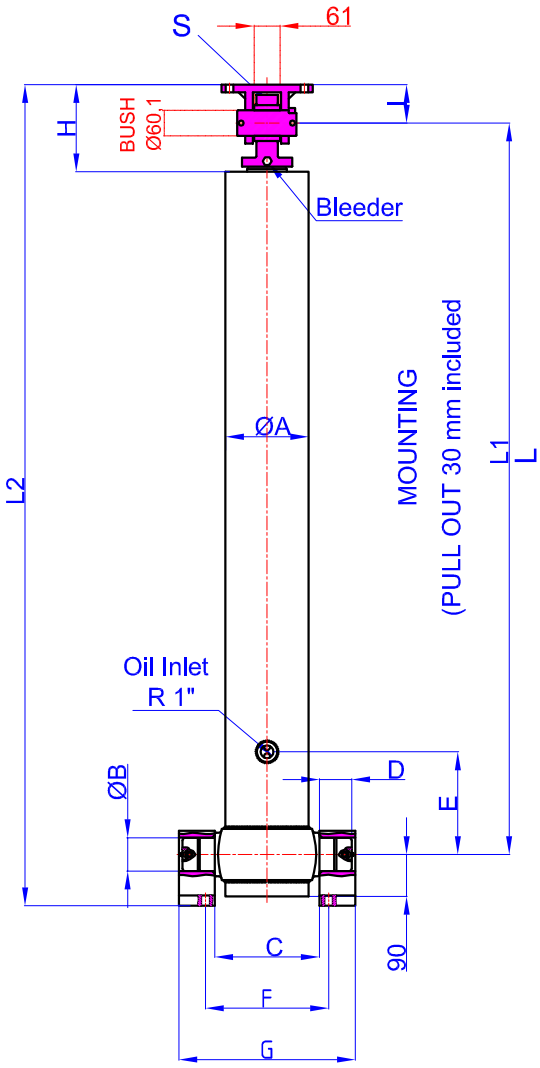

GHTC 60-90
47000035-02-002

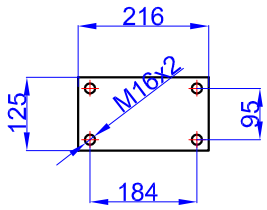

BRACKET KIDS
65-150-220-38
47000055-0001

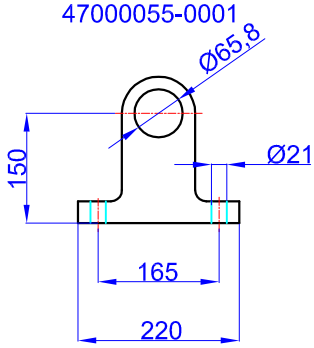

A	:	220	mm
B	:	65	mm
C	:	265	mm
D	:	60	mm
E	:	200	mm
F	:	343	mm
G	:	425	mm
H	:	185	mm
I	:	90	mm
L	:	1520	mm
*L1	:	1550	mm
L2	:	1760	mm
S	:	52	mm

* Inc 30 mm pull out : tolerance +20 -0

Hard Chromed all stages
Working Pressure : 135 Bar
Max. Working Pressure : 150 Bar
All Cylinder Materials are St 52 Cold Drawn Tubes
Tipping Weight = Weight Body + Payload

STAGE	1	2	3	4	5	6	7	8	TOTAL
EFFECTIVE DIAMETER (mm)	Ø197	Ø175	Ø154,5	Ø135	Ø116				
STROKE	1240	1240	1240	1240	1240				6200
OIL DISPLACEMENT (L)	47	31,5	25	19	14,5				149,5
135 BAR (TONS)									60

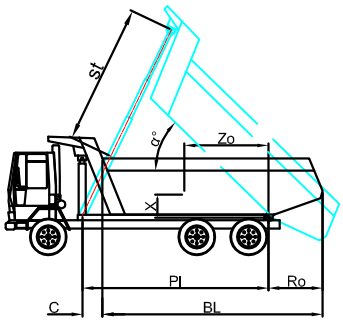

BL (body length)
Ro (rear overhang)
Ycog (vert. pos. centre of gravity)
Pl(Pivot lengt)

$$\alpha° = \frac{st \times 60}{Pl}$$

BL	7900			7700			7500		
Ro	200	500	800	200	500	800	200	500	800
α°	45	47	49	46	48	50	47	49	52
Ycog									
600	50	55	60	51	56	62	52	58	64
900	54	59	66	55	61	69	57	63	72
1200	58	65	74	60	68	78	62	71	83
st	5925	5953	5961	5903	5920	5916	5875	6000	5980