GALİPOĞLU HİDROMAS ®

Phone : 90.332 • 239 0852 (pbx)
Fax : 90.332 • 239 0851
Addres : 2. Organize Sanayi Bölgesi
Evrenköy Caddesi No: 14 KONYA/TURKIYE
Selçuklu Vergi Dairesi : 388 008 09 71 • Ticaret Sicil No : 16745
Oda Sicil No : 23761 • Sanayi Sicil No : 10 / 1026
hidromas@hidromas.com

GHS 197 x 5 x 6425 C

Drawing No :43197564253
Referance No :04-001

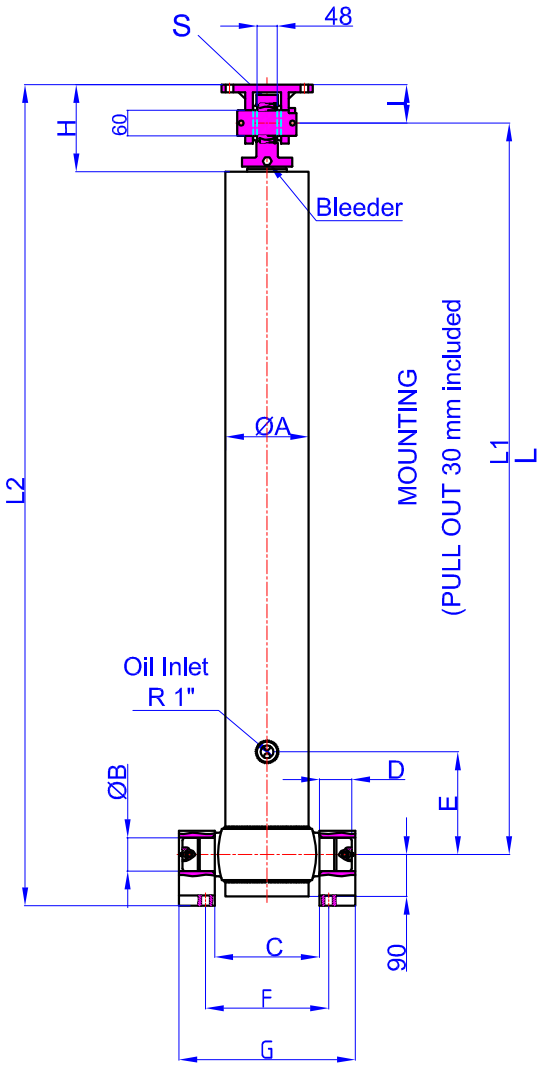

GHTC 60-90
47000035-02-001

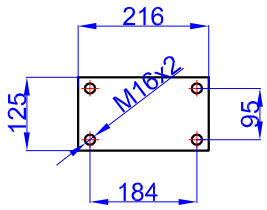

BRACKET KIDS
65-150-220-38
47000055-0001

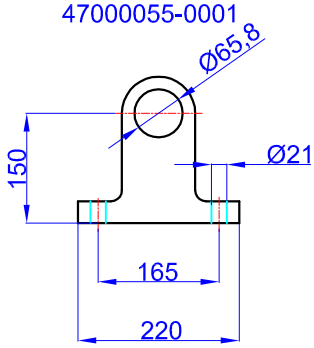

A	:	220	mm
B	:	65	mm
C	:	265	mm
D	:	60	mm
E	:	200	mm
F	:	343	mm
G	:	425	mm
H	:	185	mm
I	:	90	mm
L	:	1570	mm
*L1	:	1600	mm
L2	:	1810	mm
S	:	52	mm

* Inc 30 mm pull out : tolerance +20 -0

Hard Chromed all stages
Working Pressure : 135 Bar
Max. Working Pressure : 150 Bar
All Cylinder Materials are St 52 Cold Drawn Tubes
Tipping Weight = Weight Body + Payload

STAGE	1	2	3	4	5	6	7	8	TOTAL
EFFECTIVE DIAMETER (mm)	Ø197	Ø175	Ø154,5	Ø135	Ø116				
STROKE	1285	1285	1285	1285	1285				6425
OIL DISPLACEMENT (L)	41	32,5	26	19,5	14,5				146
135 BAR (TONS)									64 T

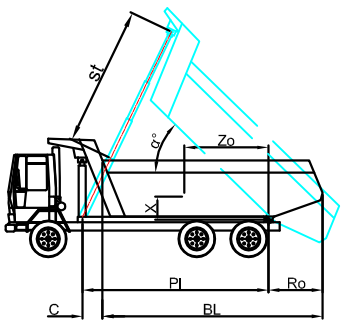

BL (body length)
Ro (rear overhang)
Ycog (vert. pos. centre of gravity)
Pl(Pivot lengt)

$$\alpha° = \frac{st \times 60}{Pl}$$

BL	8200			8000			7800		
Ro	200	500	800	200	500	800	200	500	800
α°	45	47	49	46	48	50	47	49	52
Ycog									
600	50	54	59	50	55	60	52	57	62
900	53	58	64	55	60	67	56	62	70
1200	57	63	71	59	66	75	61	69	80
st	6150	6188	6206	6133	6160	6166	6110	6125	6240