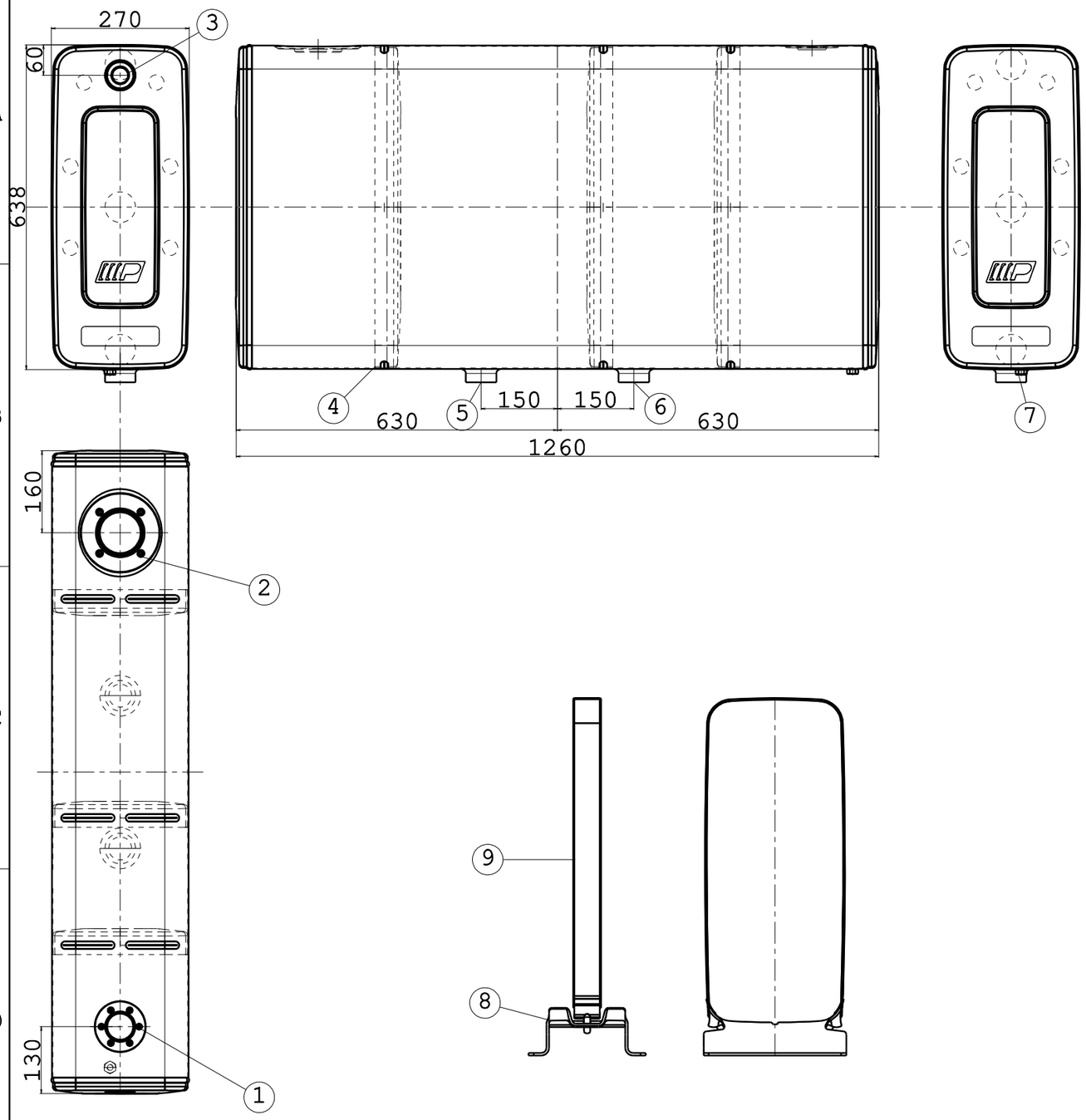

1 OIL CAP FLANGE

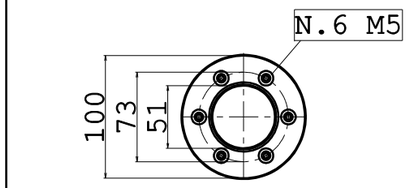

SCALE 1:5

2 RETURN FILTER FLANGE

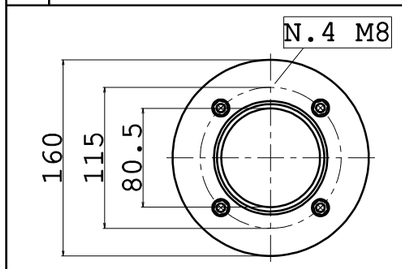

SCALE 1:5

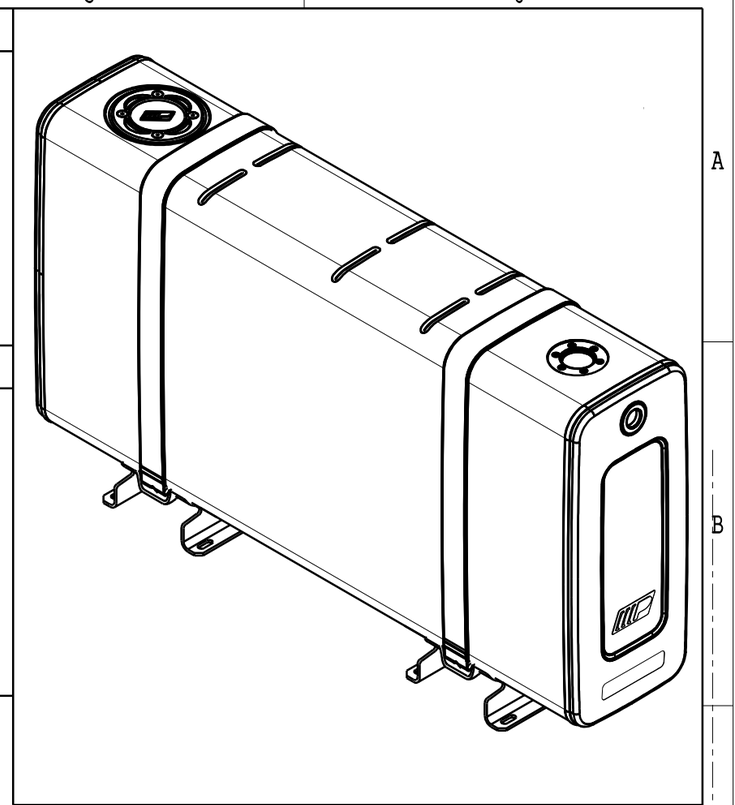

8 SUPPORT CONNECTION DETAIL

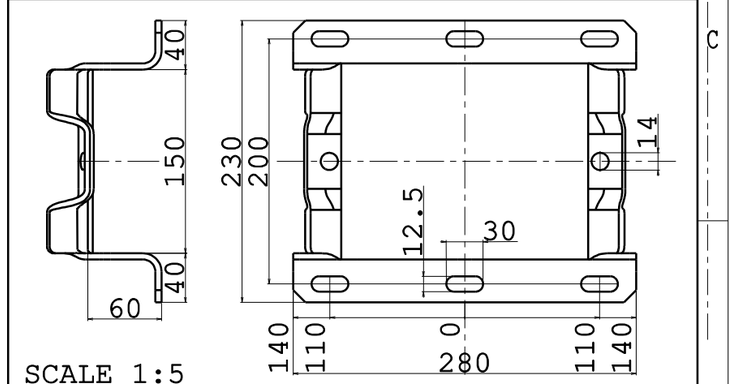

SCALE 1:5

Tank composition

Pos.	Denomination	Q.ty
1	OIL CAP FLANGE	1
2	RETURN FILTER FLANGE	1
3	1" LEVEL INDICATOR	1
4	PARTITION	3
5	1" 1/2 OIL RETURN	1
6	1" 1/2 OIL SUCTION	1
7	SERVICE METRIC NUT	1
8	CLASSIC SUPPORT	2
9	STRAP	2

Rev.	Description	Date	Dis.	Ver.	App.
0	EMISSION	22/06/2017	MM	MM	EB

Tank dimension

Level indicator capacity: 182 Lt

Full capacity: 200 Lt

Support weight

Tank weight (F,I,T) kg (A) kg

Dimension: 1260x638x270 mm

Part name: Oil tank 200 LT Al/Steel/St.Steel fam. Classic

Part code: PRT170600

Replace the

Replaced by

Scale 1:10

Material code

(X)=F:Steel DC03A EN 10130

(X)=I:Stainless steel AISI 304 UNI EN 10088

(X)=T:Textured stainless steel. AISI 304 UNI EN 10088

(X)=A:Aluminium EN AW 5754 UNI EN 573-3

General tolerances: ISO 2768 V

Drawing format A3

Padoan®

OWNERSHIP OF THIS DRAWING IS RESERVED BY LAW AND MAY NOT REPRODUCED IN WHOLE OR IN PART WITHOUT PERMISSION OF PADOAN S.R.L.

DO NOT MAKE MEASUREMENTS ON DRAWING
DO NOT CHANGE WITHOUT TECHNICAL OFFICE AUTHORIZATION